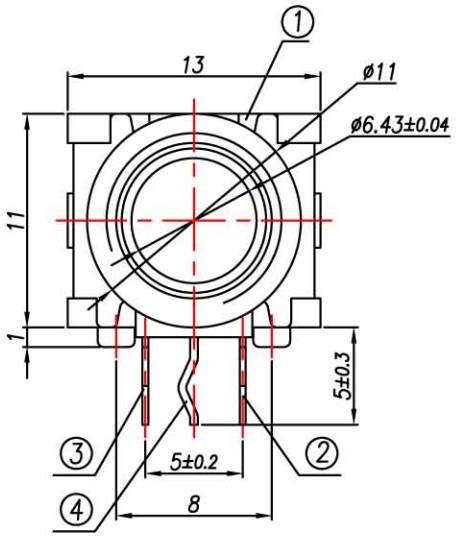

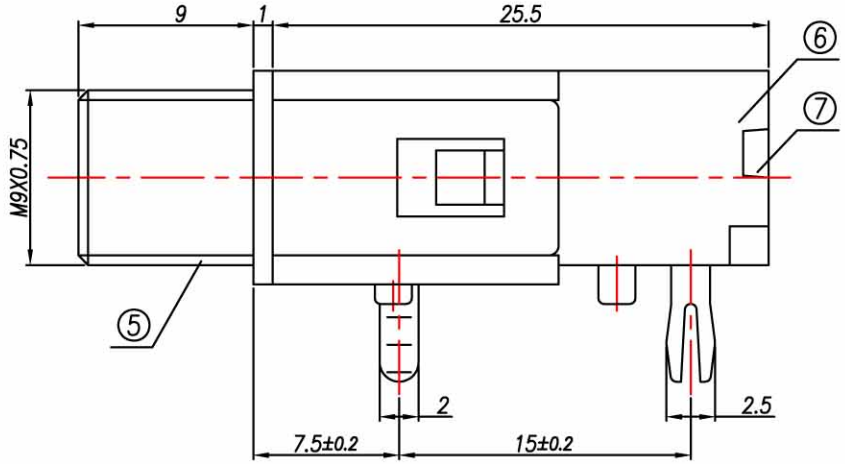

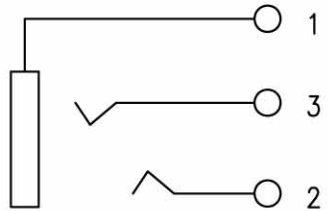

CIRCUIT DIAGRAM

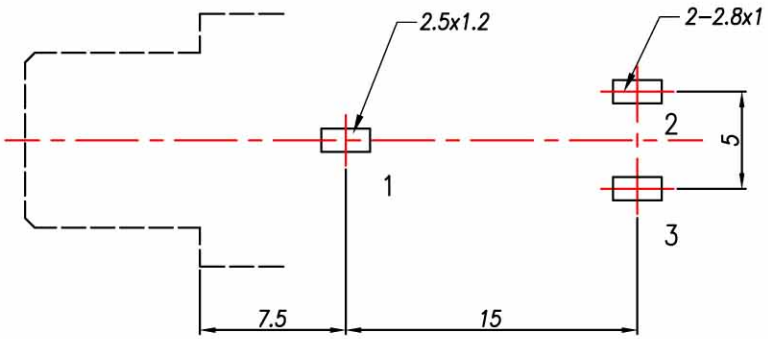

PCB MOUNTING HOLES(tolerance:±0.1)
(VIEWED FROM COPPER SIDE)

NO.	PART NAME	Q'TY	MATERIAL(THICK,COLOR)	REMARK
7	Cover	1	ABS 94HB (Red)	RoHS Compliant
6	Housing	1	ABS 94HB (Black)	
5	Sleeve	1	H59	Ni–plated, RoHS Compliant
4	Ground Terminal	1	H62 t=0.5	CuSn–plated, RoHS Compliant
3	3# Terminal	1	QSn6.5–0.1 t=0.4	Ag–plated, RoHS Compliant
2	2# Terminal	1	QSn6.5–0.1 t=0.4	
1	1# Terminal	1	QSn6.5–0.1 t=0.2	

Dimensions unless otherwise specified	
Size Range	Tolerance
L≤ 1	±0.15
1 < L≤ 8	±0.20
8< L≤ 23	±0.25
23< L≤ 50	±0.30
ANGAL	±3°

VIMEX INTERNATIONAL CORPORATION

SCALE: 2:1

VIEW:

UNIT: mm

DESCRIPTION.
PHONE JACK

MODEL NO.
SCJ-0651A