ALLOWANCE		MARK	DATE	DESCRIPTION OF REVISION	APPROVED
UNDER 3	± 0.1	△	. .		
3 TO 6	± 0.2	△	. .		
6 TO 18	± 0.3	△	. .		
18 TO 50	± 0.4	△	. .		
50 OVER	± 0.5				

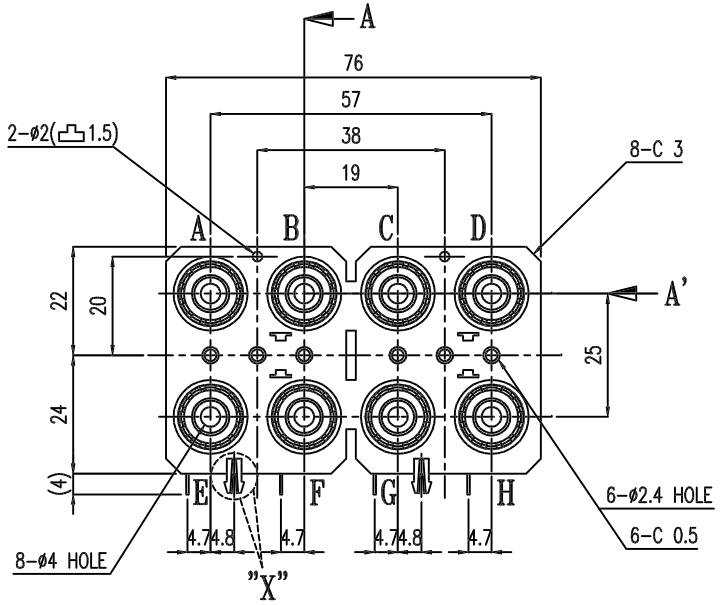

SECTION A-A'

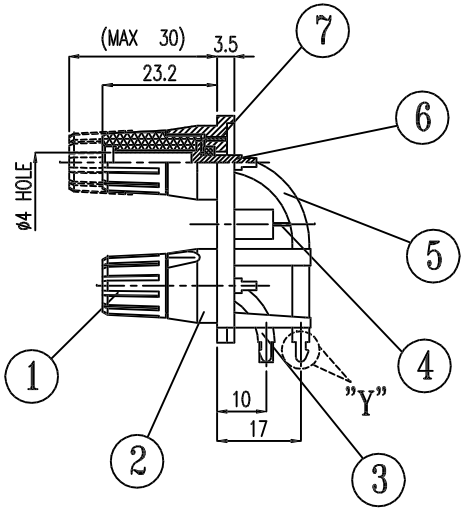

DETAIL "Y"

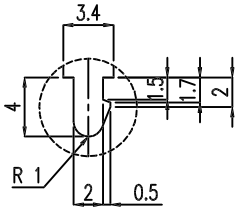

PCB MTG
(Solder surface)

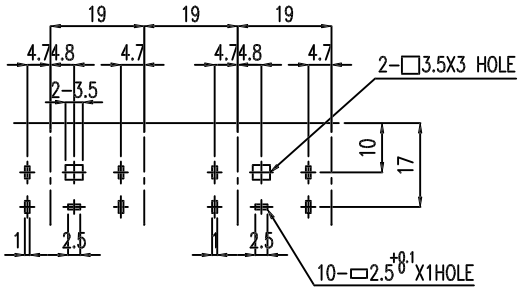

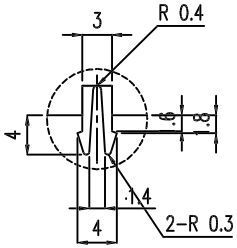

DETAIL "X"

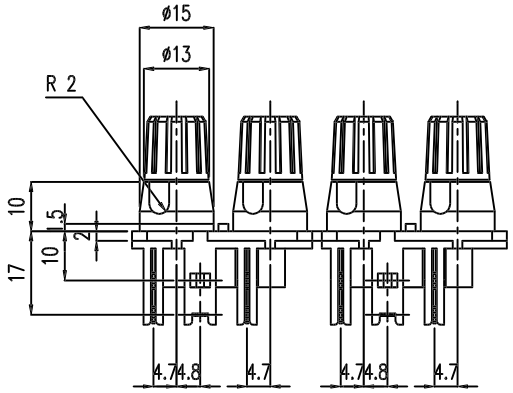

NO	PART NAME	MATERIAL	QUANTITY	PART NO	REMARKS
7	NUT	SPCC	8	1NU845	ZN -PLATING
6	POST	C2600	8	1P0843	SN -PLATING
5	TERMINAL-L	C2680 1/2H 0.5t	4	2P202	SN -PLATING
4	EARTH TER'	C2680 1/2H 0.5t	2	2P201	SN -PLATING
3	TERMINAL-S	C2680 1/2H 0.5t	4	2P203	SN -PLATING
2	BASE	ABS 94HB	1	2M738	BLACK
1	KNOB	ABS 94HB	8	2M737	A; R B; B C; B D; R E; R F; B G; B H; R

VIMEX INTERNATIONAL CORPORATION

SCALE 1/1 DIMENSION m/m

REVISION	DRAWING	CHECKED	APPROVED		
1.3	1999.06.10	1999.06.10	1999.06.10	NAME TITLE	SPEAKER TER' BOARD(8P)
				DRAWING NUMBER	SH0810360P