ALLOWANCE		MARK	DATE	DESCRIPTION OF REVISION	APPROVED
UNDER 3	± 0.1	△	. .		
3 TO 6	± 0.2	△	. .		
6 TO 18	± 0.3	△	. .		
18 TO 50	± 0.4	△	. .		
50 OVER	± 0.5				

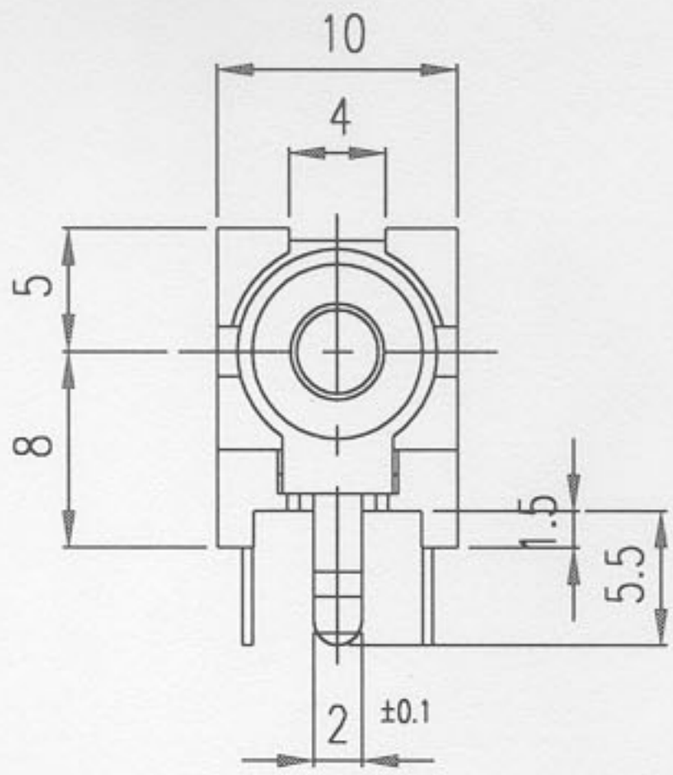

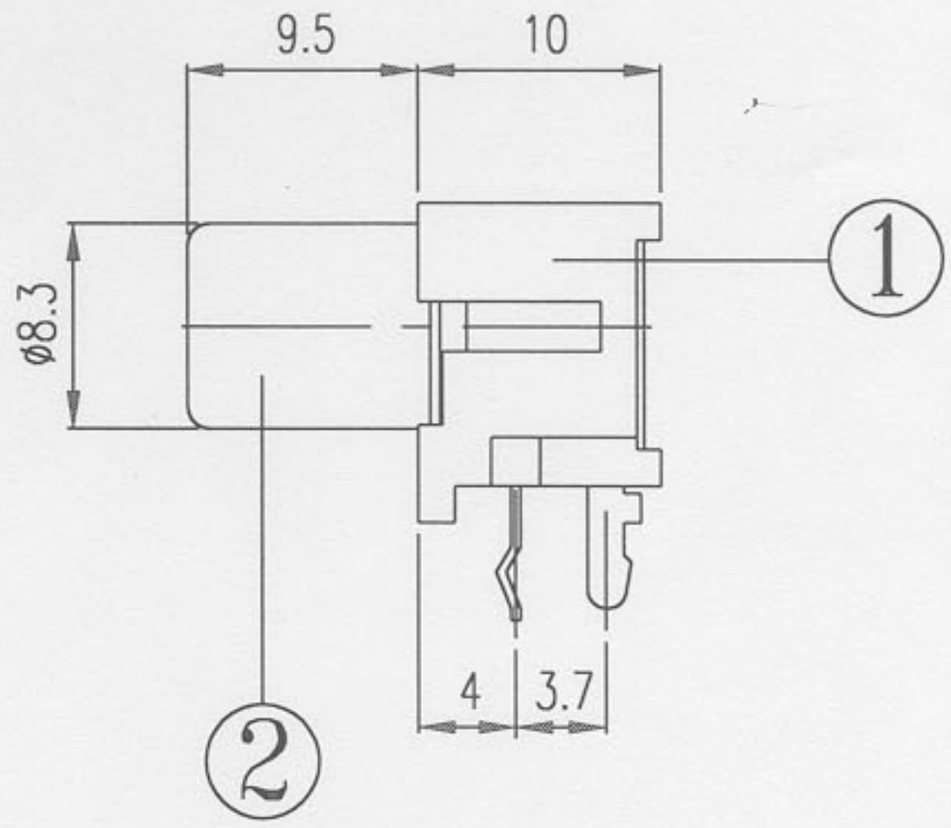

SCHEMATIC

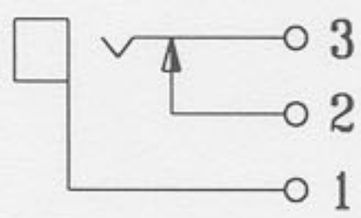

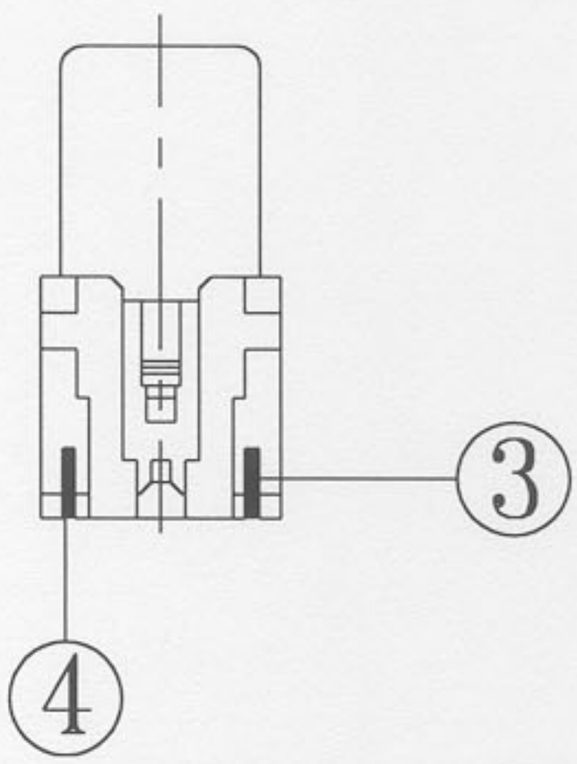

PCB MTG
(Solder surface)

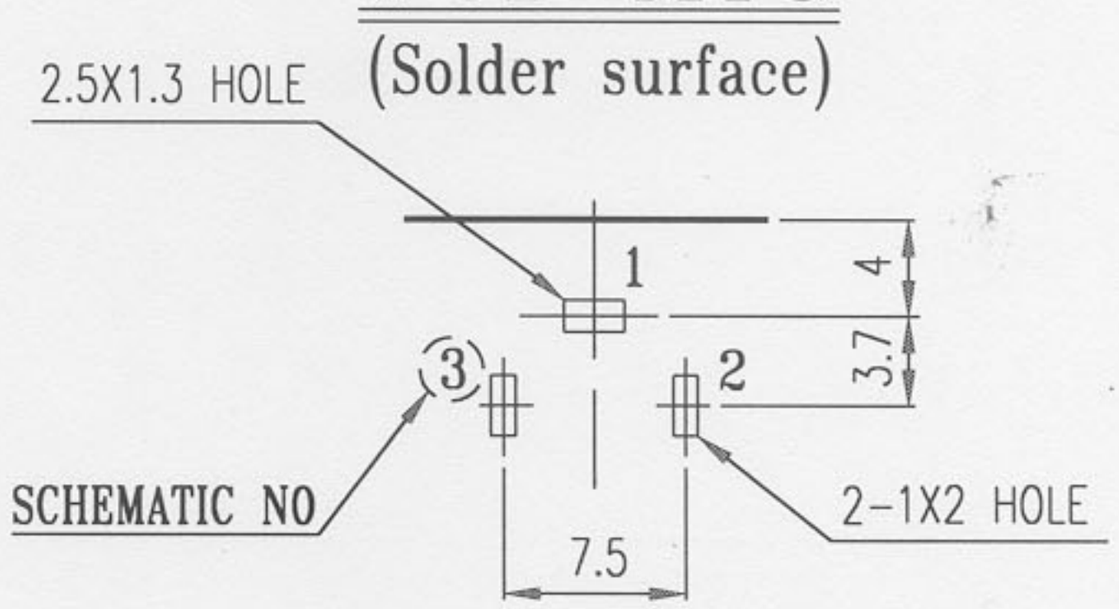

NO	PART NAME	MATERIAL	QUANTITY	PART NO	REMARKS
4	SPRING TER'	C5210 H 0.3t	1	2P238	SN-PLATING
3	BREAK TER'	C2680 1/2H 0.4t	1	2P239	SN-PLATING
2	CAP GROUND	C2600 1-0 0.4t	1	1P236	AU-PLATING
1	BASE	ABS 94 V-0	1	2M639	ORANGE

VIMEX INTERNATIONAL CORPORATION

SCALE 2/1 DIMENSION m/m

REVISION	DRAWING	CHECKED	APPROVED	NAME TITLE	PIN JACK BOARD(1P)
1.1				DRAWING NUMBER	JR010136HG
	1995.3.8	1995.3.8	1995.3.8		